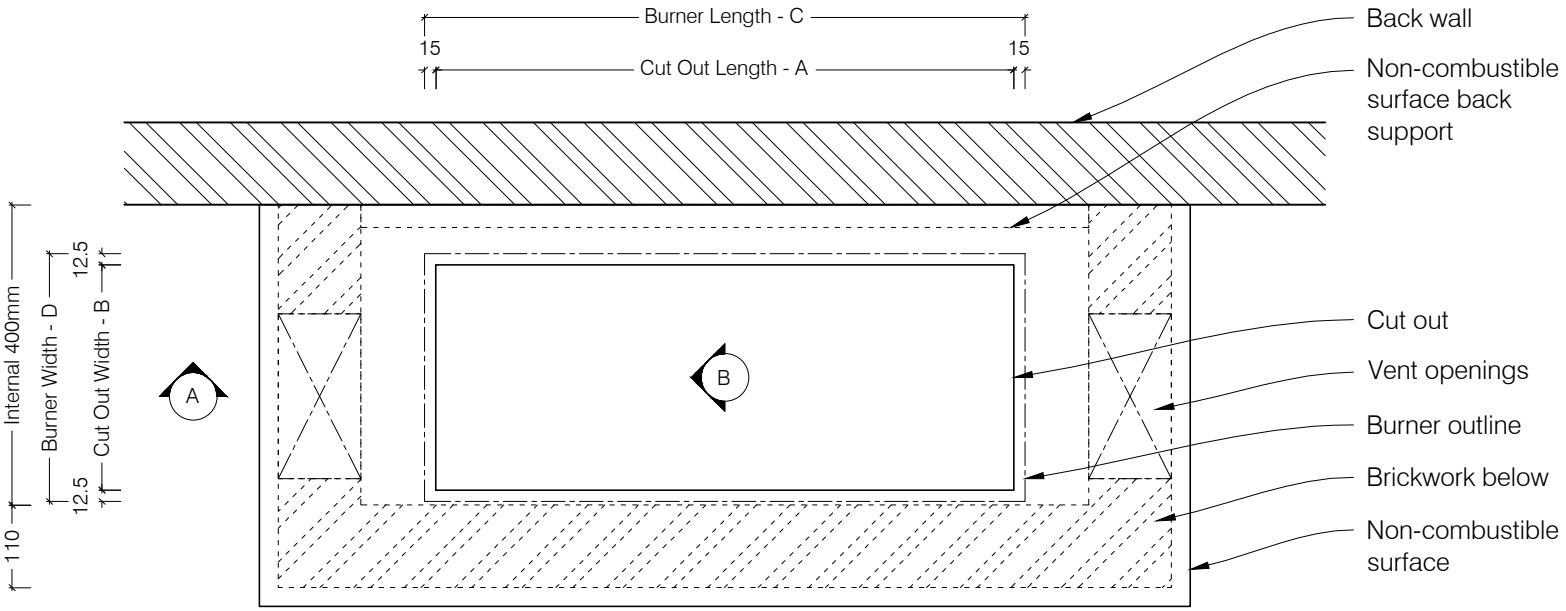

Top View

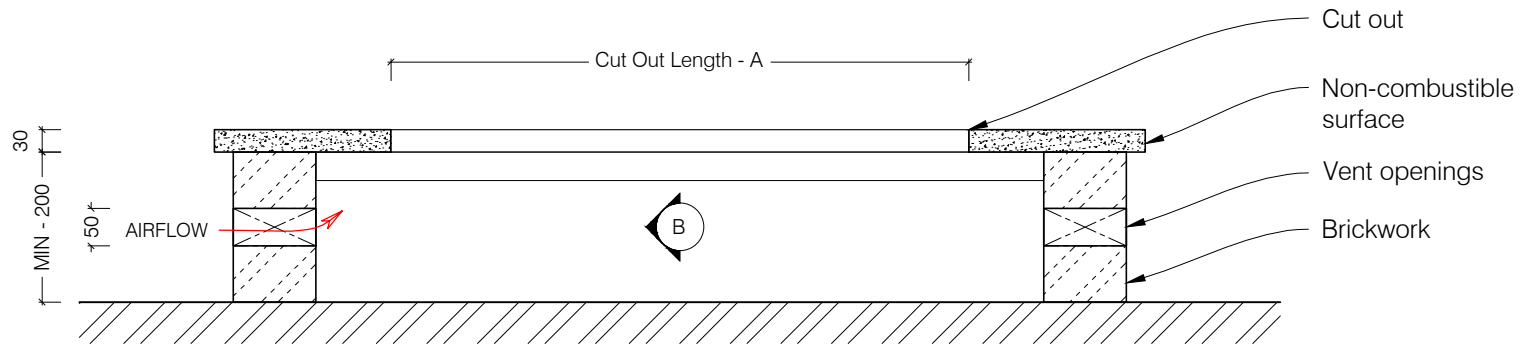

Sectional Front View A

NOTE:

- **Vent openings can be anywhere in the support structure.**
- **Minimum of 200mm space required below the cutout in the mounting surface for internal components.**
- **Mounting surface that the burner is being mounted into must be of a non-combustible material.**
- **Installation must comply with the all relevant building regulations of the area where the installation is to occur.**
- **NB this is merely a typical installation, consult a specialist builder for alternative possibilities.**

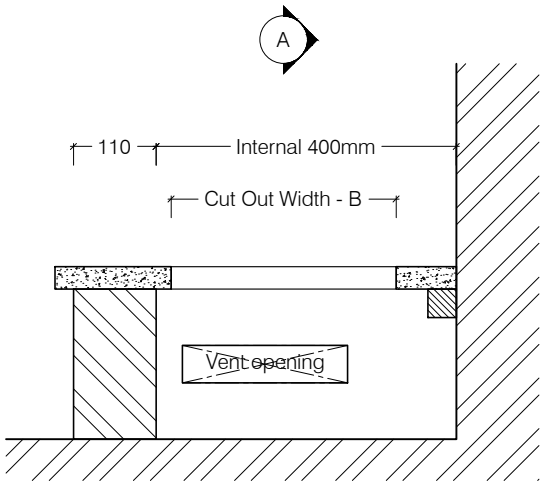

Sectional Side View B

Signi Fires™

www.signifires.com

Drop In Fluless Gas Burners
Brick Support Structure

© This drawing is copyright and remains the property of Beauty Fires.
It may not be retained, copied or used without written consent.

Product Code	Cut Out Size	Product Size	Consumption	Output
SIGGAS001/7/13/19	(A)770 x (B)200 mm	(C)800 X (D)225 mm	425 g/hour	6,5 Kw
SIGGAS002/8/14/20	(A)970 x (B)200 mm	(C)1000 X (D)225 mm	675 g/hour	10 Kw
SIGGAS003/9/15/21	(A)1170 x (B)200 mm	(C)1200 X (D)225 mm	675 g/hour	10 Kw
SIGGAS004/10/16/22	(A)1370 x (B)200 mm	(C)1400 X (D)225 mm	850 g/hour	13 Kw
SIGGAS005/11/17/23	(A)1720 x (B)200 mm	(C)1750 X (D)225 mm	1355 g/hour	20 Kw
SIGGAS006/12/18/24	(A)1970 x (B)200 mm	(C)2000 X (D)225 mm	1355 g/hour	20 Kw